Electrolux PROFESSIONAL

Modular Cooking Range Line thermaline 90 - 4-Burner Gas Top on Passthrough Static Gas Oven, 2 Sides, H=800

ITEM #

MODEL #

NAME #

SIS #

AIA #

589617 (MCQJFCJCPO) 4-burner gas top on passthrough gas static oven, two-side operated

Short Form Specification

Item No.

Unit constructed according to DIN 18860_2 with 20 mm drop nose top and 70 mm recessed plinth. Internal frame for heavy duty sturdiness in 2 mm and 3 mm in 1.4301 (AISI 304). 2 mm top in 1.4301 (AISI 304). Flat surface construction, easily cleanable. THERMODUL connection system enables seamless worktop when units are connected and avoids soil penetrating. 4 gas burners with optimized combustion, flame failure device, thermocouple safety hand valve and protected pilot flame. Triple ring "flower" flame burners with anti-clogging design. Manual gas valves allow precise flame intensity control. Large pan support in cast iron with long center fins for various pan sizes. Deep flat spillage tray with rounded corners and drain hole. Metal knobs and oven handles with embedded hygienic silicon "soft" grip enable easier handling and cleaning.
Gas static oven chamber with 40 mm thick oven door and ribbed enamelled steel base plate. Oven chamber with 2 levels of runners for 2/1 GN shelves to enable simultaneous and faster cooking. Heavy duty thermostat with temperature range up to 300°C, electronic sensor for precise temperature control and manual humidity control in the cooking chamber. Upper heating element can also be used for grilling, with or without ventilating mode.
IPX5 water resistant certification.

APPROVAL:

Configuration: Freestanding, two-side operated.

Main Features

- Flame failure device on each burner protects against gas leakage when accidental extinguishing of the flame occurs.
- Large sized pan support in cast iron with long center fins to allow the use of the largest down to the smallest pans.
- Manual gas valves allow precise control of the flame intensity between high and low positions.
- Manual oven shut-off valve.
- Pans can easily be moved from one area to another without lifting.
- 40 mm thick oven door for heat insulation.
- All major components may be easily accessed from the front.
- THERMODUL connection system creates a seamless work top when units are connected to each other thus avoiding soil penetrating vital components and facilitating the removal of units in case of replacement or service.
- Metal knobs with embedded hygienic "soft-touch" grip for easier handling and cleaning. The special design of the controls prevents infiltration of liquids or soil into vital components.
- Oven chamber to have 2 levels of runners to accommodate 2/1 GN trays and ribbed enamelled steel base plate.
- The upper heating element of the oven can also be used for grilling.
- Manual control of humidity in cooking chamber.
- Electronic sensor for precise temperature control.
- Burners with optimized combustion. Triple ring flower flame burners with anti-clogging design.
- 100% safety pilot and thermocouple.
- Oven temperature up to 300 °C
- Large visible digital display manufactured in tempered glass to resist heat and chemicals, showing temperatures or power settings. The display also shows on/off status of the appliance and on/off status of the heating elements.
- Patented Flower Flame burners that adjust to the size and form of the cookware (Patent EP2708813B1 and related family).

Construction

- Each burner equipped with thermocouple safety hand valve and protected pilot flame.
- 2 mm top in 1.4301 (AISI 304).
- Unit constructed according to DIN 18860_2 with 20 mm drop nose top and 70 mm recessed plinth.
- Flat surface construction with minimal hidden areas to easily clean all surfaces
- IPx4 water protection.
- Internal frame for heavy duty sturdiness in stainless steel.

The company reserves the right to make modifications to the products without prior notice. All information correct at time of printing.

Included Accessories

• 1 of Grid, chromium plated, for ovens 2/1 GN	PNC 910652	

Optional Accessories

• KIT LPG NOZZLES G30/30MBAR-4BUR+OVEN10KW	PNC 913292	❑
• - NOT TRANSLATED -	PNC 913656	❑
• GAS MAINSWITCH FOR MODULAR H800 GAS UNITS (FACTORY FITTED)	PNC 913698	❑

The company reserves the right to make modifications to the products without prior notice. All information correct at time of printing.

Modular Cooking Range Line
thermaline 90 - 4-Burner Gas Top on Passthrough Static Gas Oven, 2 Sides, H=800

Front

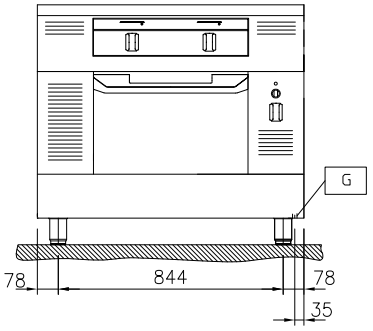

Side

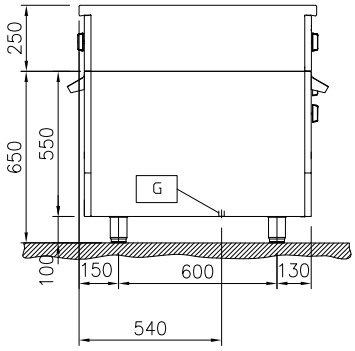

EQ = Equipotential screw
G = Gas connection

Top

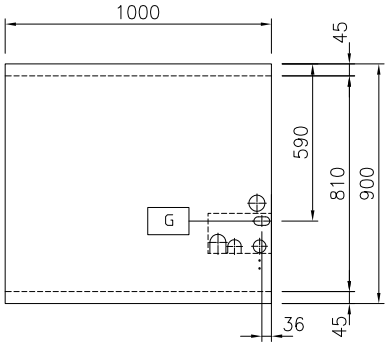

Gas

Gas Power:	47 kW
Gas Type Option:	
Gas Inlet:	1/2"

Key Information:

Oven working Temperature:	80 °C MIN; 300 °C MAX
Oven Cavity Dimensions (width):	683 mm
Oven Cavity Dimensions (height):	255 mm
Oven Cavity Dimensions (depth):	671 mm
External dimensions, Width:	1000 mm
External dimensions, Depth:	900 mm
External dimensions, Height:	800 mm
Net weight:	163 kg
Configuration:	Both-Sides Operated;On Oven
Front Burners Power:	ISO 9001; ISO 14001 - ISO 9001; ISO 14001 kW
Back Burners Power:	10 - 10 kW
Back Burners Dimension - mm	Ø 70 Ø 70
Front Burners Dimension - mm	Ø 70 Ø 70

The company reserves the right to make modifications to the products without prior notice. All information correct at time of printing.

2026.03.30